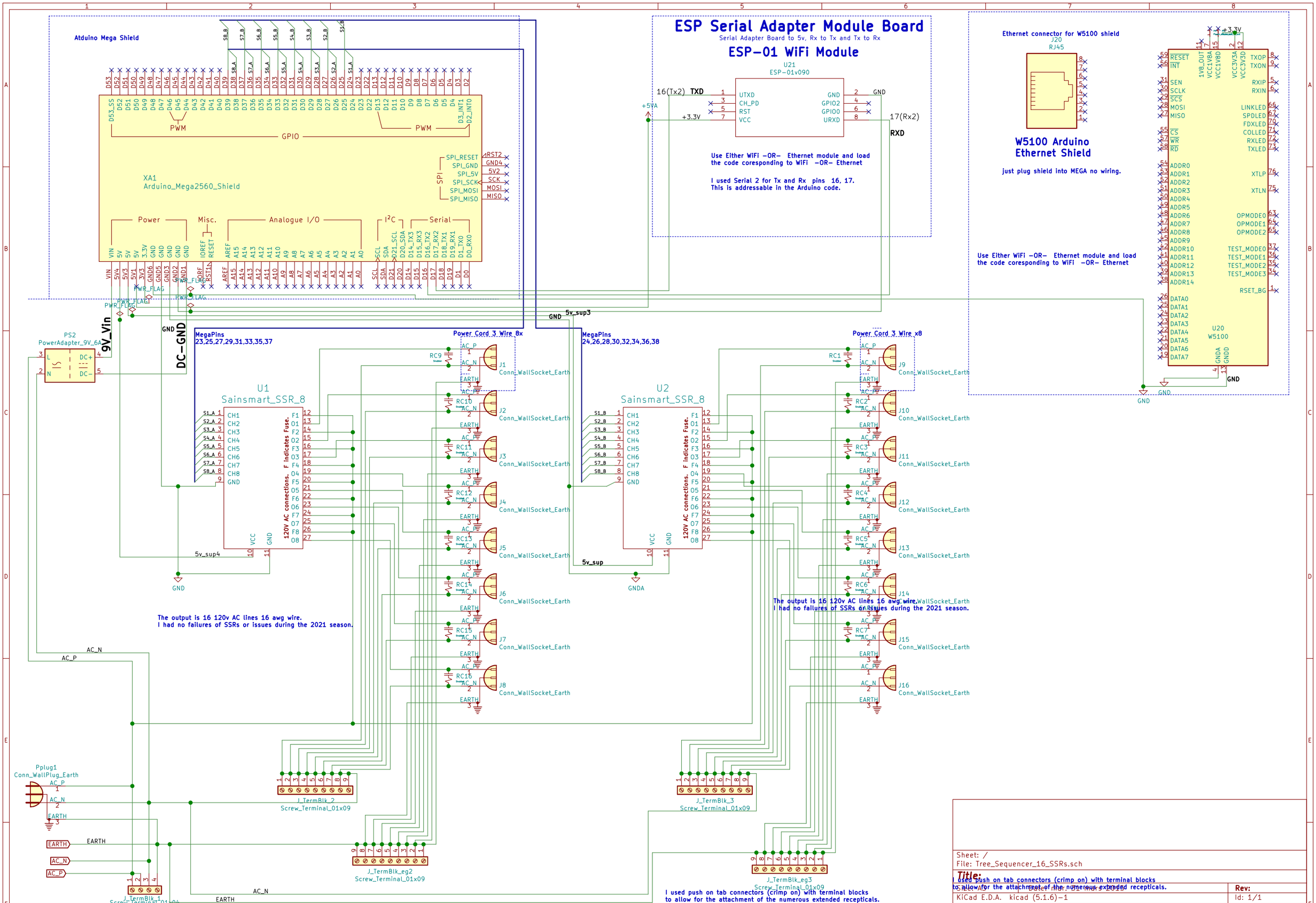
Atduino Mega Shield
XA1
Arduino_Mega2560_Shield
GPIO
PWM
Power
Misc.
Analogue I/O
I²C
Serial
SPI
ESP Serial Adapter Module Board
Serial Adapter Board to 5v, Rx to Tx and Tx to Rx
ESP-01 WiFi Module
U21
ESP-01v090
16(Tx2) TXD
17(Rx2)
RXD
+5VA
+3.3V
GND
Use Either WiFi -OR- Ethernet module and load the code coresponding to WiFi -OR- Ethernet
I used Serial 2 for Tx and Rx pins 16, 17.
This is addressable in the Arduino code.
Ethernet connector for W5100 shield
J20
RJ45
W5100 Arduino Ethernet Shield
just plug shield into MEGA no wiring.
U20
W5100
PS2
PowerAdapter_9V_6A
9V_Vin
DC-GND
MegaPins 23,25,27,29,31,33,35,37
MegaPins 24,26,28,30,32,34,36,38
U1
Sainsmart_SSR_8
U2
Sainsmart_SSR_8
120V AC connections. F indicates Fuse.
Power Cord 3 Wire 8x
Power Cord 3 Wire x8
Conn_WallSocket_Earth
5v_sup3
5v_sup4
5v_sup
GNDA
The output is 16 120v AC lines 16 awg wire.
I had no failures of SSRs or issues during the 2021 season.
Pplug1
Conn_WallPlug_Earth
J_TermBlk_1
Screw_Terminal_01x04
J_TermBlk_2
Screw_Terminal_01x09
J_TermBlk_3
Screw_Terminal_01x09
J_TermBlk_eg2
Screw_Terminal_01x09
J_TermBlk_eg3
Screw_Terminal_01x09
I used push on tab connectors (crimp on) with terminal blocks
to allow for the attachment of the numerous extended recepticals.
Sheet: /
File: Tree_Sequencer_16_SSRs.sch
Title:
KiCad E.D.A. kicad (5.1.6)-1
Rev:
Id: 1/1